REPAIR PROCEDURES FOR Holland MARK V LANDING GEAR

Manufactured after May 1, 1994.

CAUTION: Before attempting any repair procedures you must read and understand the following safety practices.

- **DO NOT attempt to repair any landing gear component without following the instructions contained in this manual.**
- **DO NOT modify, change, or add to the product. Use only genuine Holland parts.**
- **Perform all procedures in a lighted area clear of obstacles and other personnel.**
- **Always wear safety goggles.**
- **DO NOT strike any part of the product with a steel hammer.**
- **Observe standard precautions when lifting.**

This manual contains repair procedures for Mark V landing gear manufactured after May 1, 1994. Use the figures below to identify your Holland Mark V landing gear.

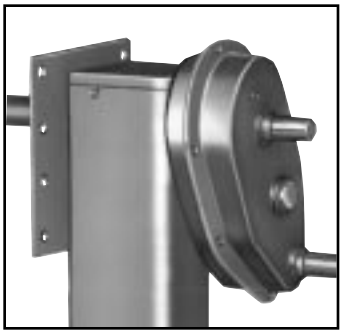

Mark V manufactured prior to May 1, 1994

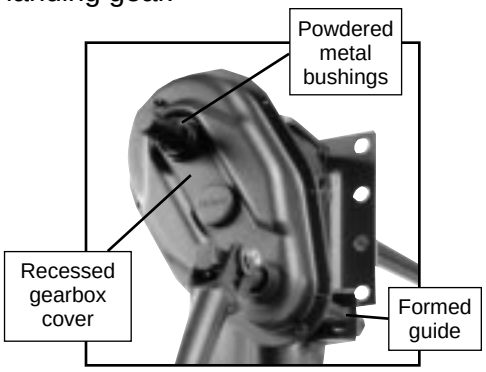

Mark V manufactured after May 1, 1994

CAUTION: Before performing any landing gear repair or rebuild procedure, the following precautions must be taken.

1. Position the tractor and trailer on firm level ground free of persons and obstacles.
2. Chock the trailer wheels.
3. Securely couple tractor to trailer.
4. Set the tractor and trailer brakes.
5. Retract (raise) landing gear until off ground.

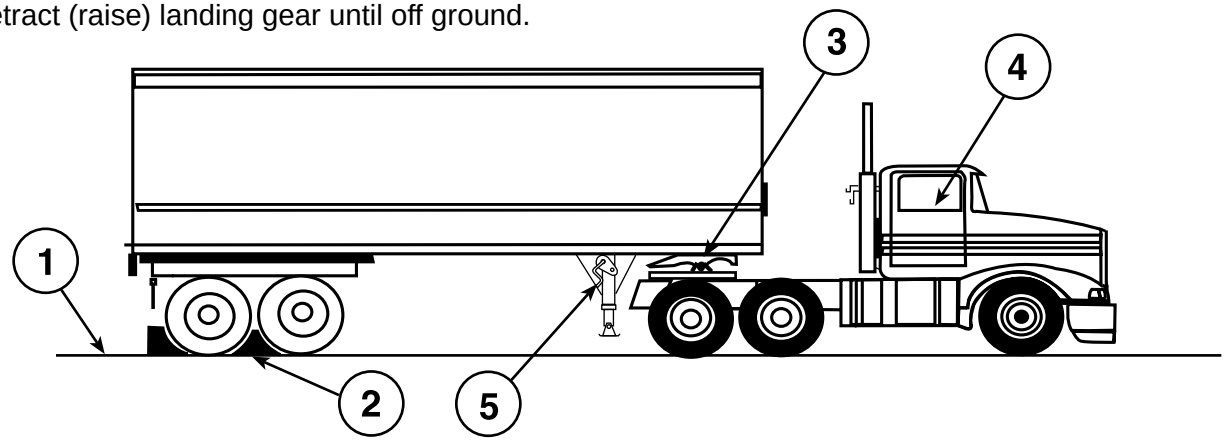

TROUBLESHOOTING GUIDE: Before beginning any repair or rebuild procedure, review the troubleshooting guidelines below. The guide can help you identify specific problems and remedies for your Mark V landing gear. (The item numbers referred to in the table are identified in the exploded view and parts list found on pages 10 and 11.)

Problem	Cause	Correction
Hard to crank landing gear	1. Turning the crank in wrong direction.	1. See Mark V Operating Procedures for proper crank rotation. (Holland Publication LG-TE-11)
	2. Attempting to raise or lower trailer in high gear.	2. Shift into low gear. DO NOT ATTEMPT TO LIFT OR LOWER IN HIGH GEAR!
	3. Cross shaft binding • over-tightened bolts • cross shaft bent or too long	3. Inspect cross shaft bolts *(items 17).* Back off bolts to allow lateral (side to side) movement of the cross shaft. Straighten or shorten cross shaft to eliminate binding.
	4. Misaligned landing gear legs.	4. Legs must be parallel and extend and retract evenly. Remove cross shaft, adjust landing gear legs to same height.
	5. Lack of grease.	5. Grease landing gear legs as provided in Mark V Maintenance Procedures. (Holland Publication LG-TE-11)
	6. Misaligned crankshaft holder or crank shaft extension.	6. Inspect and align crankshaft holder or extension with the crankshaft.
	7. Damaged lift screw or lift nut.	7. Check landing gear for signs of impact (accident) damage. Disconnect cross shaft and crank legs individually to determine which leg is damaged. Replace damaged leg.
	8. Interference between powder metal bushing of gearbox and trailer mounting surface.	8. Trailer mounting surface may need to be modified. See Holland Service Bulletin No. 30.
Crankshaft jams or skips while turning	1. Inner leg screw damage.	1. Examine the lift nut and screw of the inner leg assembly *(item 27, 28, or 29)* for impact (accident) damage.
	2. Worn, broken or damaged gears (missing teeth).	2. Examine pinion, bevel pinion and all gearbox gears *(items 24, 26, 6, 10, 13, and 14)* for missing teeth or other signs of damage or wear.
Will not stay in gear while cranking	1. Shift lock ball and spring *(items 8 and 9)* of crank shaft *(item 1)* are jammed, damaged or missing.	1. Remove gearbox cover *(item 3).* Check condition of bushing, shaft, ball and spring. (See “Gearbox Disassembly” pages 3 and 4.)
Crank turns but legs will not extend or retract	1. Gear pin(s) sheared in gearbox.	1. Remove gearbox cover *(item 3).* Inspect and replace broken pins *(items 12, 11, and 15).*
	2. Bevel gear pin sheared in top of leg.	2. Remove upper leg cover *(item 21).* Check for damaged or missing pins *(items 30 or 23)* under bevel gear *(item 26)* or in pinion gear *(item 24).*

GEARBOX DISASSEMBLY:

1. Remove the crank handle bolt (item 50), washers (item 51), and nut (item 18). Remove the crank handle (item 52).

2. To ease removal of the gearbox cover (item 3), remove all rust, burrs and paint and lubricate the crankshaft (item 1) and drive shaft (item 2).

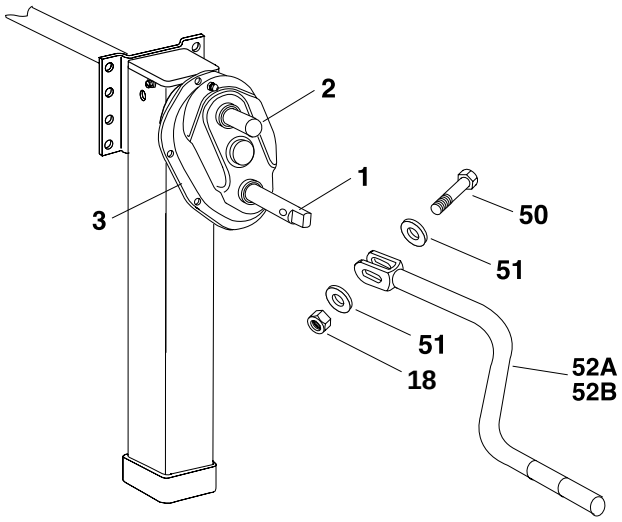

Figure 1

3. Slide off the gearbox cover (item 3). Make sure that the shifter shaft stays in low gear and does not come out with the gearbox cover. (Otherwise, the ball and spring will be lost in the grease, see items 8 and 9, Figure 4). Then, remove the six gearbox cover screws (item 4) and gearbox cover (item 3).

4. Remove the cover gasket (item 5). Use care not to tear or damage it.

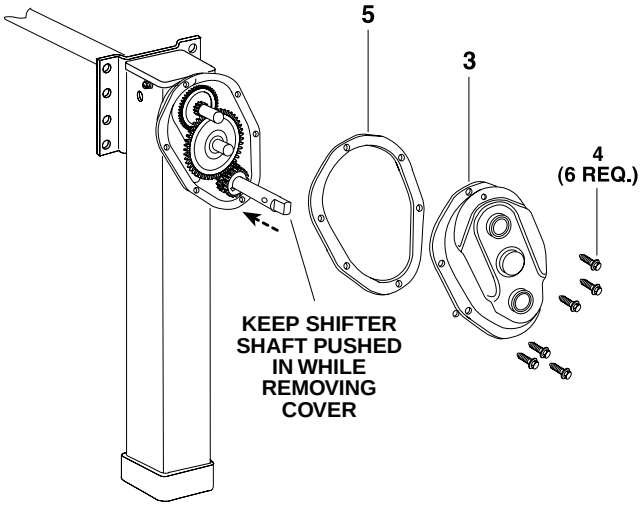

Figure 2

5. Referring to Figure 3, remove the gears from the gearbox in the following order:

   A. Slide the idler gear (item 6) off the idler gear shaft (item 7).

   B. Slide the step gear (item 14) off the drive shaft (item 2).

   C. Remove the idler gear shaft (item 7).

   D. Remove the spur gear (item 13).

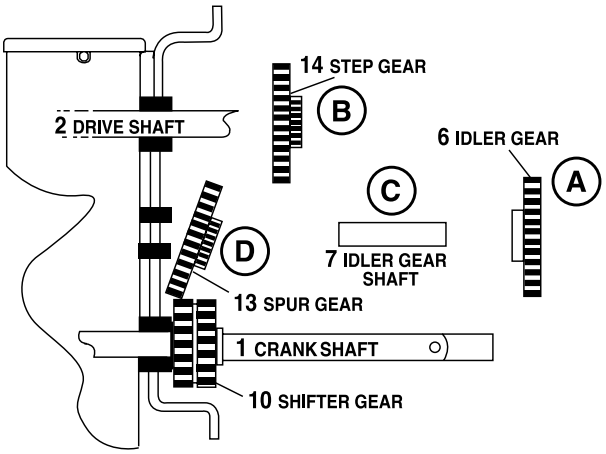

Figure 3

6. Remove the crankshaft (item 1) by tapping it out from behind the mounting plate (see Figure 4). Be prepared to catch the detent ball (item 8) and spring (item 9) as you remove the crankshaft.

7. Remove the spring pin (item 12) from the crankshaft (item 1) then slide off the shifter gear (item 10) and remove the retaining pin (item 11).

8. Replace all worn, bent, broken, or damaged parts.

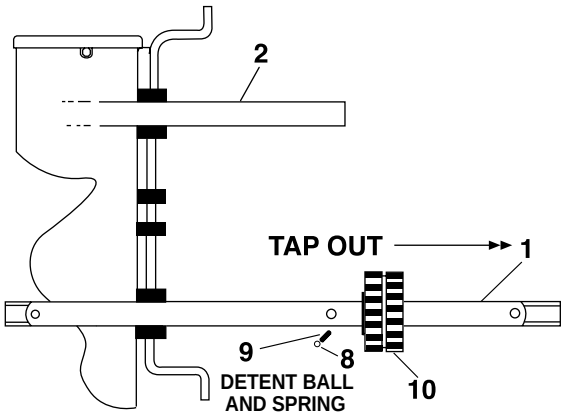

Catch the ball and spring as you remove the crankshaft.

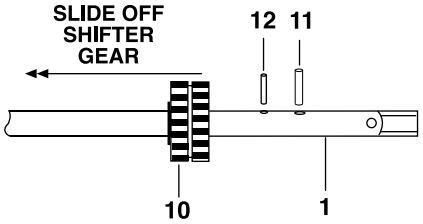

Figure 4

LEG DISASSEMBLY:

1. For two-speed legs, disassemble the gearbox as described in steps 1-7, on pages 3-4.

2. Remove the bolts (item 17) and nuts (item 18) from each end of the cross shaft (item 16) and remove the cross shaft.

3. Remove the eight (8) landing gear mounting bolts from the mounting plate and remove the landing gear leg from the trailer.

4. Remove the leg cover screws (item 4), leg cover (item 21) and leg cover gasket (item 22).

5. Remove the plastic plug (item 48) from the bevel pinion gear access hole (see Figure 5).

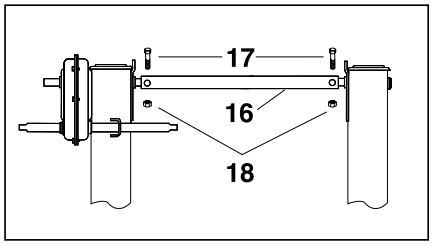

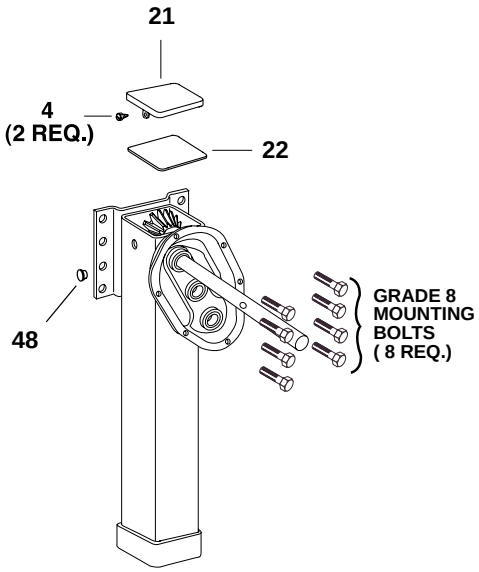

Figure 5

6. Place a punch in the access hole, align it with the bevel pinion gear groove pin (item 23) and drive out the groove pin (see Figure 6).

7. Carefully remove the drive shaft (item 2) or the bevel gear shaft (item 19) and count the number of shims (item 25) used, so that the same number is used during re-assembly of the leg.

8. Remove bevel pinion gear (item 24).

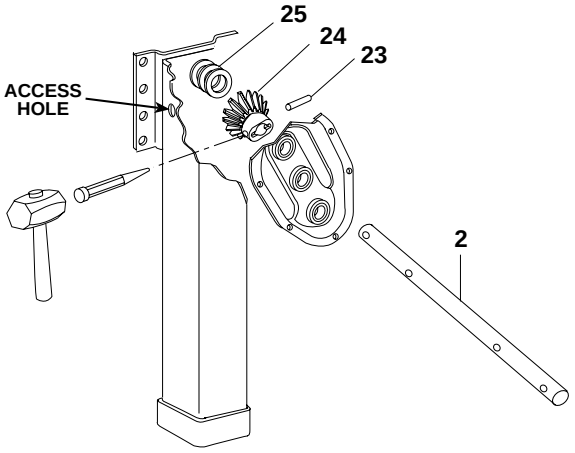

Figure 6

9. Lift bevel gear (item 26) off of the top of the lift screw (item 27, 28 or 29). This may require the use of a gear puller or two 5/16" Allen keys.

10. Support the bottom of the leg and remove the pin (item 30) and washer (item 31) from lift screw (item 27, 28, or 29).

11. Carefully remove the support which should allow the inner leg to drop out. If not, tap the end of the lift screw with a wooden block or brass hammer until the lift screw and inner leg assembly drop out of the outerleg. Be careful not to damage the lift screw threads.

12. Lift the bushing (item 32), thrust bearing (item 33), and collar (item 34) off the inner leg lift screw assembly.

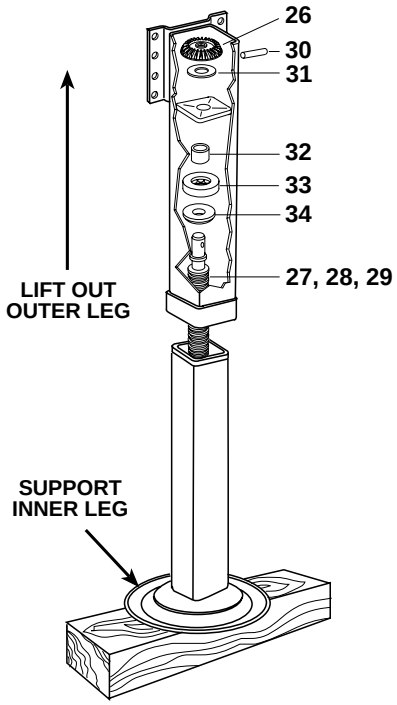

Figure 7

13. Thoroughly clean all components and replace all worn, bent, broken, or damaged parts.

LEG ASSEMBLY:

1. Slide the collar (item 34) over the lift screw in the inner leg assembly (item 27, 28, or 29) with the tapered portion of the collar facing down. Place the thrust bearing (item 33) on top of the collar with the cup of the bearing facing up.

2. Slide the bushing (item 32) onto the screw and push all the way down onto the bearing (item 33).

3. Rotate the lift screw counter-clockwise until it is fully extended, then fill the “cup” area of the lift nut with grease as shown in Figure 8.

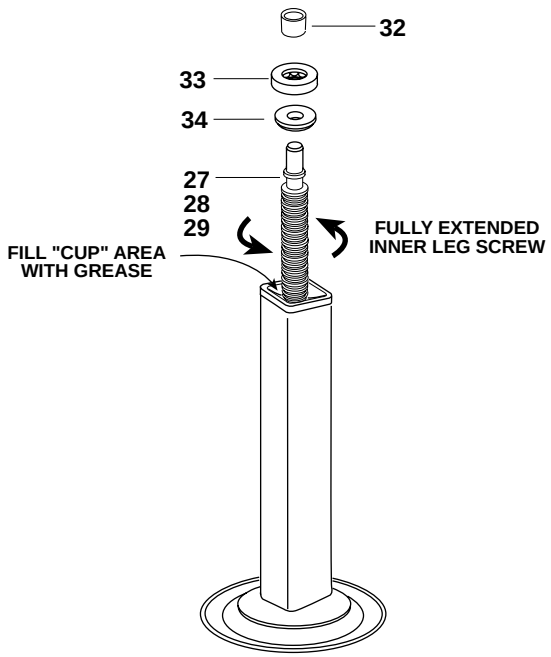

Figure 8

4. Place the outer leg assembly (item 35 or 36) over the inner leg assembly (item 27, 28, or 29) and press down until the end of the lift screw protrudes through the hole in the top of the outer leg assembly as shown in Figure 9.

5. Place the washer (item 31) and slide the bevel gear pin (item 30) through the hole in the side of the lift screw, centering the pin in the lift screw.

6. Slide the bevel gear (item 26) over the lift screw and position it on the pin as shown in Figure 9. When properly engaged, the top of the bevel gear will be approximately flush with the top of the lift screw.

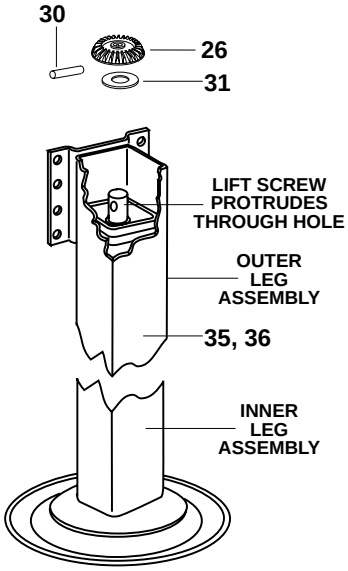

Figure 9

7. Position the bevel pinion gear (item 24) on top of the bevel gear. For single-speed legs the bevel pinion gear should be on the opposite side of the landing gear mounting plate, as shown in Figure 11. For two-speed legs, the bevel pinion gear should be against the mounting plate side of the landing gear, as shown in Figure 10.

8. On two-speed legs, slide the drive shaft (item 2) into the gearbox side of the outer leg (item 35), through the bevel pinion gear, through any shims removed previously, and through the hole in the other side of the outer leg as shown in Figure 10.

   On single-speed legs slide the bevel pinion gear shaft (item 19) into the side of the outer leg (item 36) opposite the landing gear mounting plate, through any shims removed previously, through the bevel pinion gear, and through the hole in the other side of the outer leg as shown in Figure 11.

9. Align the holes in the bevel pinion gear with the holes in the shaft (item 2 or 19), partially insert the groove pin (item 23) through the shaft and bevel pinion gear so that the shaft turns freely and the two gears are properly engaged.

   To check for proper shimming, push the shaft and bevel pinion gear (item 24) tight against the bevel gear (item 26). There should be no more than 1/16" gap between the shims and the outer leg. Then push the shaft and bevel pinion gear (item 24) tight against the tube wall and the shaft should turn freely.

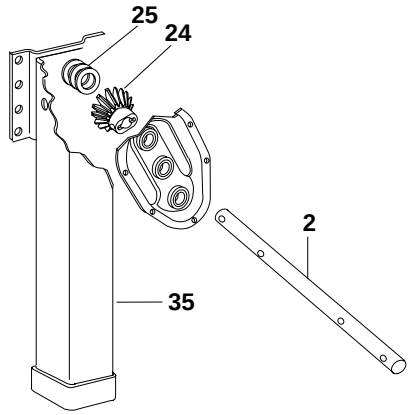

TWO-SPEED LEG

Figure 10

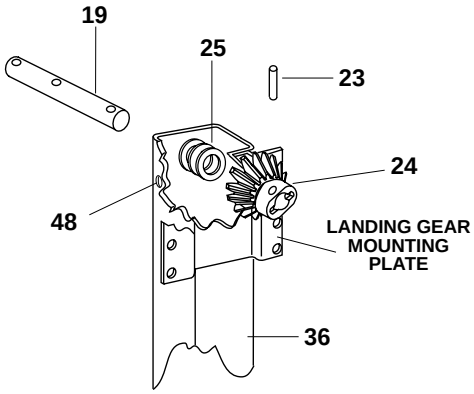

SINGLE-SPEED LEG

Figure 11

10. If shims (item 25) are necessary, remove the groove pin (item 23), bevel pinion gear (item 24) and bevel pinion gear shaft (item 19). Install shims between the bevel pinion gear (item 24) and the outer leg (item 35 or 36). Once properly shimmed, drive groove pin (item 23) fully into shaft (item 19).

11. Replace the plastic access hole plug (item 48). Thoroughly grease the bevel pinion gear and bevel gear. A minimum of 1 lb. is recommended. Then, replace the leg cover gasket (item 22) and leg cover (item 21).

GEARBOX ASSEMBLY:

1. Install pin (item 11) through crankshaft (item 1) and slide the shifter gear (item 10) in place with the recess in the shifter gear over the pin. Now, secure the gear in place using the retaining pin (item 12). See Figure 12.

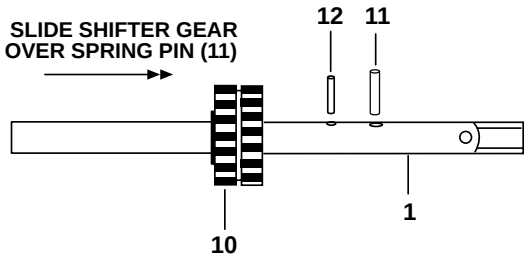

Figure 12

2. Insert the spring (item 9), then ball (item 8) into the blind hole in the crankshaft (item 1).

3. While compressing the ball and spring into the hole, carefully slide the crankshaft into the shift lock bearing of the gearbox as shown in Figure 13. The ball and spring should be captured under the bearing surface. Push the crankshaft into the gearbox until it is engaged in low gear.

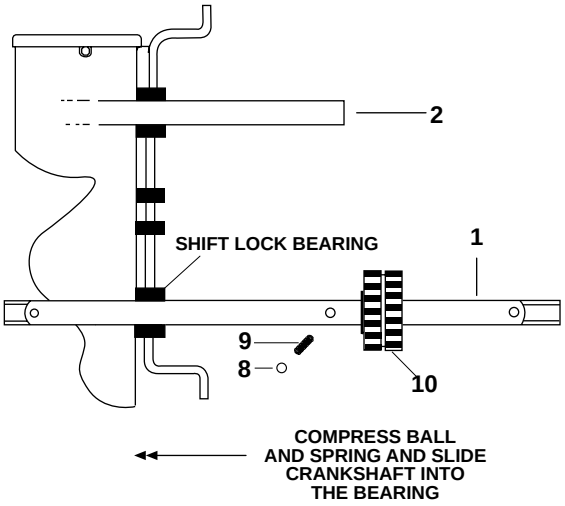

Figure 13

4. Lubricate the idler gear (item 6), spur gear (item 13), step gear (item 14), and idler gear shaft (item 7) with grease. Make sure the inside bores of the gears are fully lubricated.

   Referring to Figure 14 below, reassemble the gearbox in the following order:

   A. Engage the spur gear (item 13) with the shifter gear (item 10) and center the spur gear (item 13) over the center bushing of the gearbox.

   B. Slide the idler gear shaft (item 7) through the spur gear (item 13) and into the center bushing of the gearbox.

   C. Install the pin (item 15) through the drive shaft (item 2) and slide the step gear (item 14) over the drive shaft. Make sure the pin is seated in the cutout portion of the step gear (item 14).

   D. Slide the idler gear (item 6) onto the idler gear shaft (item 7) engaging the step gear (item 14).

5. Now, fully lubricate all gears and gear shafts in the gearbox. A minimum of 1 lb. is recommended.

6. Replace the gasket (item 22) and gearbox cover (item 21) with the six screws (item 4).

7. Remount the landing gear using eight grade 8 bolts on the mounting plate and all necessary support bracing required by the trailer manufacturer.

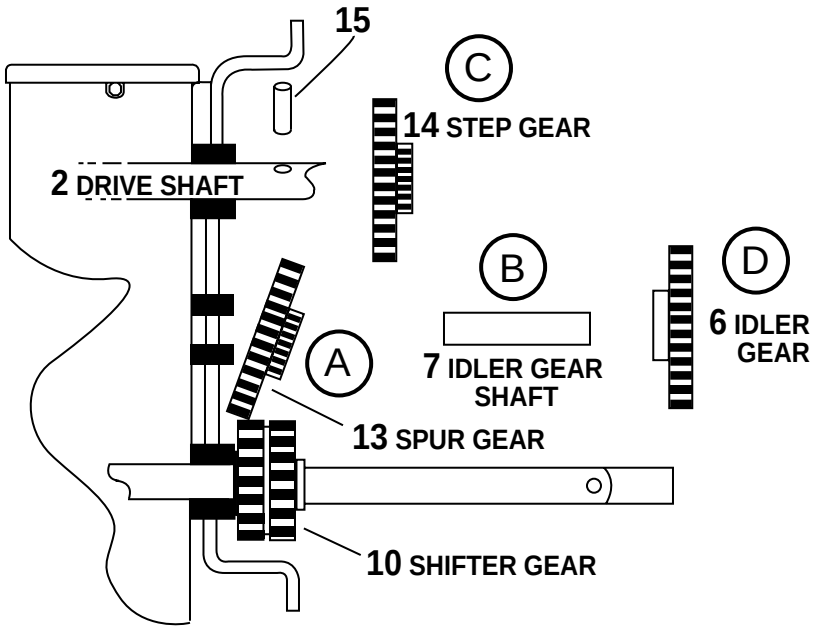

Figure 14

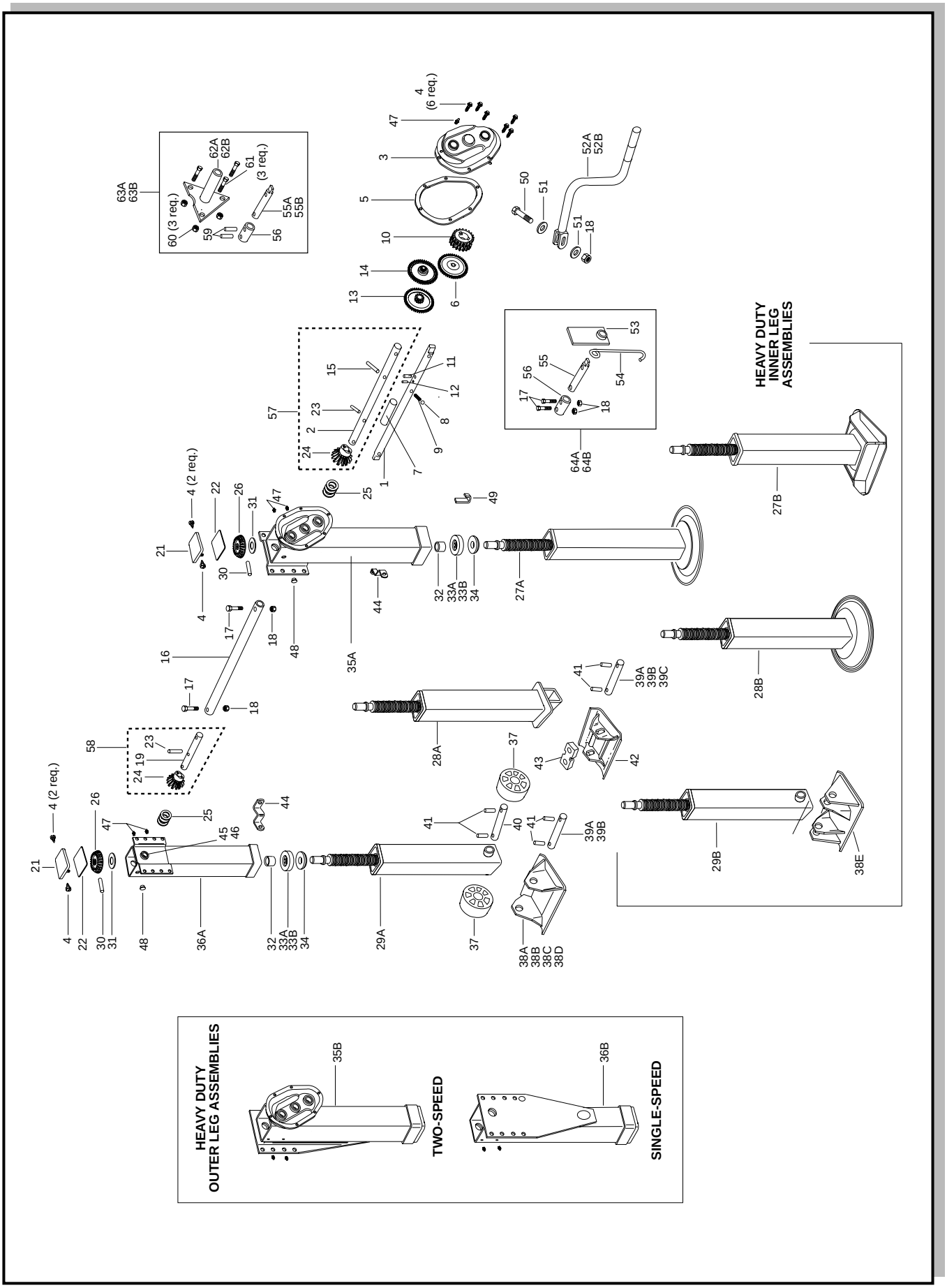
HEAVY DUTY
INNER LEG
ASSEMBLIES
HEAVY DUTY
OUTER LEG ASSEMBLIES
TWO-SPEED
SINGLE-SPEED

ITEM	PART NUMBER	TWO SPEED SIDE	SINGLE SPEED SIDE	PART NAME
1	XA-V-06625-A thru C	1		Crankshaft (see page 9)
2	XA-V-06624-A thru D	1		Drive gear shaft (see page 9)
3	XA-V-06618	1		Gearbox cover assembly
4	XB-06372	8	2	Thread rolling screw
5	XB-V-06621	1		Gearbox gasket
6	XA-V-06602	1		Idler gear
7	XA-V-07085	1		Idler gear shaft
8	XB-BAL-023-01	1		Ball
9	XB-SPG-020-02	1		Spring
10	XA-V-06604-1	1		Shifter gear
11	XA-CRP-V-06633	1		Pin, .25" x 1.44"
12	XB-21-S-218-1500	1		Spring pin, .22" x 1.50"
13	XA-V-06606	1		Spur gear
14	XA-V-06603	1		Step gear
15	XA-CRP-V-06634	1		Pin, .38" x 1.5"
16	XA-V-1910		1	Cross shaft (specify frame width, mounting style, l.g. model no.)
17	XB-V-444-1	1	1	HHCS, 3/8"-16 x 1.75"
18	XB-338	2	1	Locknut, 3/8"-16
19	XA-V-06623-A thru D		1	Bevel pinion gear shaft (single-speed) (see page 9)
21	XA-V-06611	1	1	Upper leg cover
22	XB-V-07054	1	1	Gasket
23	XB-GP-38-1-12-E	1	1	Groove pin
24	XA-V-06600	1	1	Bevel pinion gear
25	XB-01977	2	2	Shim (as required)
26	XA-V-06601	1	1	Bevel gear
27A	XA-V-06628-010-1 thru -515-1	1	1	Inner leg & screw assy. (01 series) (see page 9)
27B	XA-H-06628-010-3 thru -515-3			Inner leg & screw assy. (012 series) (see page 9)
28A	XA-V-06628-020-2 thru -514-2	1	1	Inner leg & screw assy. (14 series) (see page 9)
28B	XA-H-06628-010-1 thru -515-1			Inner leg & screw assy. (H.D. 01 series) (see page 9)
29A	XA-V-06628-000-0 thru -505-0	1	1	Inner leg & screw assy. (05, 13, or 15, or 23 series) (see page 9)
29B	XA-H-06628-000-0 thru -505-0			Inner leg & screw assy. (312 series) (see page 9)
30	XA-CRP-V-06635	1	1	Pin, .38" x 2"
31	XB-V-06632	1	1	Washer
32	XB-V-06630	1	1	Bushing
33A	XB-V-647	1	1	Thrust bearing
33B	XB-V-647-1	1	1	Thrust bearing (Heavy Duty)
34	XA-V-06629	1	1	Collar
35A	XA-V-07133-0 thru -5	1		2-speed upper leg
35B	XA-H-07133-0 thru -5			2-speed H.D. upper leg (see page 9)

ITEM	PART NUMBER	TWO SPEED SIDE	SINGLE SPEED SIDE	PART NAME
36A	XA-V-07132-0 thru -5		1	Single-speed upper leg
36B	XA-H-07132-0 thru -5			Single-speed H.D. upper leg (see page 9)
37	XB-V-747	2	2	Wheel (03 series)
38A	XA-V-796-B-1	1	1	Skid foot, 4.9" x 12" x 11.5" (05 series)
38B	XA-V-796-L	1	1	Low profile skid foot, 2.5" x 12" x 11.5" (13 series)
38C	XA-V-796-WS	1	1	Weight saver skid foot, 3.8" x 10" x 11.5" (15 series)
38D	XA-V-796-LWS	1	1	Low profile weight saver skid foot 2.4" x 10" x 11.5" (23 series)
38E	XA-HV-796	1	1	Heavy duty skid foot 4" x 12" x 16" (312 series)
39A	XA-V-1901-1	1	1	Standard axle
39B	XA-V-1903-1	1	1	Solid axle
39C	XA-V-1902-1	1	1	Heavy pipe axle
40	XA-V-1901-2	1	1	Axle (03 series)
41	XB-21-S-375-3000	2	2	Rollpin .38" x 3"
42	XA-04681	1	1	Cushion skid foot (14 series)
43	XB-04676	1	1	Rubber cushion
44	XA-V-1938	1	1	Brace lug
45	XB-LG0559	1	2	Bearing
46	XB-LG1570	1	2	Retainer
47	XB-767	3	2	Lube fitting
48	XB-01789	1	1	Plastic plug
49	XA-V-1914	1		Crank hanger
50	XB-C-38-C-214	1		HHCS, 3/8"-16 x 2.25"
51	XB-1108	2		3/8" SAE washer
52A	XA-V-90-0	1		Crank
52B	XA-V-90-2	1		Extra long crank (optional)
53	XA-V-971	1		Crankshaft bracket (optional)
54	XB-V-1915	1		Crank hanger (optional)
55A	XA-V-1916	1		Extension shaft - long (optional)
55B	XA-V-1916-1	1		Extension shaft - short (optional)
56	XA-V-630-2	1		Crankshaft coupling (optional)
57	RK-V-07780	1		Drive gear shaft kit (2-speed)
58	RK-V-07781	1		Drive gear shaft kit (single speed)
59	XB-GP-38-138-5	2		Groove pin 3/8" x 1.38" (optional)
60	XB-3103	3		Locknut, 1/4"-28 (optional)
61	XB-07618	3		HHCS, 1/4"-28 x 3" (optional)
62A	XA-V-07601-1	1		Extension bracket - long (opt.) (length)
62B	XA-V-07601-2	1		Extension bracket - short (opt.) (length)
63A	RK-V-07602-1	1		Extension bracket & shaft kit–long
63B	RK-V-07602-2	1		Extension bracket & shaft kit–short
64A	RK-V-1997-1			Extension bracket & shaft kit–long
64B	RK-V-1997-2			Extension bracket & shaft kit–short

OUTER LEG ASSEMBLIES:

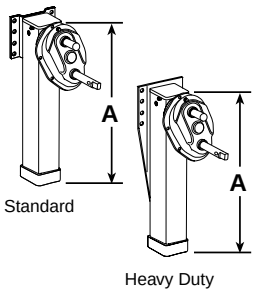

STANDARD		HEAVY DUTY		Single-Speed	Two-Speed
Travel Length	"A"	Travel Length	"A"	Leg Part Number	Leg Part Number
12.5"	23.9"	8.8"	24.7"	07132-0	07133-0
13.5"	24.8"	12"	26.3"	07132-1	07133-1
15"	26.3"	13.5"	27.8"	07132-2	07133-2
16.5"	27.8"	15.4"	28.9"	07132-3	07133-3
17.6"	28.9"	16.6"	30"	07132-4	07133-4
18.6"	30"	17.4"	31.4"	07132-5	07133-5

A = tube length

ORDER EXAMPLE:

XA – *V* – *07132-1*

Standard duty, 13.5" Travel, Single Speed Leg

V=Standard
H=Heavy Duty

INNER LEG ASSEMBLIES:

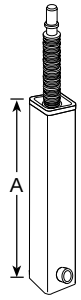

SKID FOOT STYLE

Travel Length	"A"	Part Number
9.4"	19.4"	06628-000-0
13.5"	23.3"	06628-101-0
15"	24.8"	06628-202-0
16.5"	26.3"	06628-303-0
17.6"	27.4"	06628-404-0
18.6"	28.5"	06628-505-0

(05, 13, 15 or 23 series)

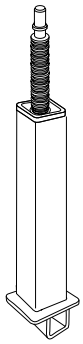

*CUSHION FOOT STYLE**

Travel Length	"A"	Part Number
11.5"	20.5"	06628-020-2
13.5"	24.3"	06628-121-2
15"	25.6"	06628-222-2
16.5"	27.3"	06628-323-2
17.6"	28.4"	06628-413-2
18.6"	29.6"	06628-514-2

* Cushion foot style leg is only available in standard duty. (14 series)

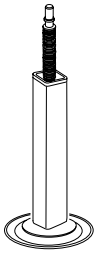

Standard

SELF-LEVELING FOOT STYLE

Travel Length	"A"	Part Number
12.5"	19.9"	06628-010-1
13.5"	23.6"	06628-111-1
15"	25.2"	06628-212-1
16.5"	26.6"	06628-313-1
17.6"	27.8"	06628-414-1
18.6"	28.9"	06628-515-1

(01 series)

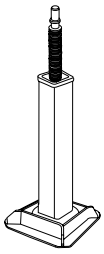

Heavy Duty

SELF-LEVELING HEAVY DUTY FOOT STYLE

Travel Length	"A"	Part Number
12.5"	21.4"	06628-010-3
13.5"	25.2"	06628-111-3
15"	26.7"	06628-212-3
16.5"	28.2"	06628-313-3
17.6"	29.3"	06628-414-3
18.6"	30.4"	06628-515-3

(012 series)

REPLACEMENT SHAFTS:

GEAR SHAFT FOR SINGLE-SPEED LEG

"A"	"B"	"C"	Part Number
12"	5.2"	11.5"	XA-V-06623-A
9.3"	5.2"	cut-off	XA-V-06623-B
9.3"	6.8"	cut-off	XA-V-06623-C
11.3"	8.6"	cut-off	XA-V-06623-D

GEAR SHAFT FOR TWO-SPEED LEG

"A"	"B"	"C"	"D"	Part Number
14"	4.2"	9.8"	13.5"	XA-V-06624-A
12"	4.2"	9.8"	cut-off	XA-V-06624-B
12"	4.2"	9.8"	cut-off	XA-V-06624-C
14.8"	7.0"	12.5"	cut-off	XA-V-06624-D

SHIFTER SHAFT FOR TWO-SPEED LEG

"A"	"B"	"C"	Part Number
19.0"	5.6"	17.5"	XA-V-06625-A
15.4"	2.1"	cut-off	XA-V-06625-B
12.9"	5.6"	cut-off	XA-V-06625-C

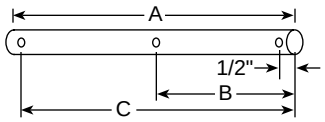

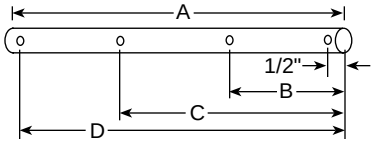

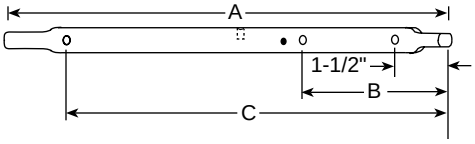

Copyright © August 1999 Holland Hitch Company

★ Holland Hitch Co.
Holland, MI 49423
(616) 396-6501
(888) 396-6501
FAX (800) 769-3299

★ Holland Hitch of New Jersey
Whitehouse Station, NJ 08889
(908) 534-4162
(888) 396-6501
FAX (800) 769-3299

★ Holland Atlantic Hitch Co.
Denmark, SC 29042
(803) 793-3313
(888) 396-6501
FAX (800) 769-3299

★ Holland Hitch of Texas, Inc.
Wylie, TX 75098
(972) 442-3556
(888) 396-6501
FAX (800) 769-3299

★ Holland Pacific Hitch Co.
Milpitas, CA 95035
(408) 262-2550
(888) 396-6501
FAX (800) 769-3299

▲ Holland Binkley Co.
Warrenton, MO 63383
(314) 456-3455
FAX (314) 456-6790

▲ Holland Binkley Co.
Holland Axle Division
Delphos, OH 45833
(419) 692-6015
FAX (419) 692-5815

★ Holland Hitch of Canada, Ltd.
Woodstock, Ontario N4S 7Z5
(519) 537-3494
FAX (800) 565-7753

▲ Holland Equipment, Ltd.
Norwich, Ontario N0J 1P0
(519) 863-3414
FAX (519) 863-2398

★ Holland Hitch Western, Ltd.
Surrey, BC V3S 5K1
(604) 574-7491
FAX (604) 574-0244

✚ Eurohitch, GmbH.
Schloss Holte
Germany
(05207) 89560
FAX (05207) 895656

✚ Eurohitch (U.K.), Ltd.
Tipton, West Midlands
United Kingdom
(021) 520-6116
FAX (021) 520-6070

Holland Transtrade
Far East Sdn. Bhd.
Kuala Lumpur, Malaysia
(03) 734-2888
FAX (03) 736-5588

Nippon Holland, Ltd.
Tokyo, Japan
(03) 3461-9130
FAX (03) 3463-1407

✚ Holland Hitch (Aust.), Ltd.
Melton, Victoria, Australia
(03) 9743-6799
FAX (03) 9747-9617